ATEX 632

Incremental encoder with complementary signals and marker pulse

- **Intrinsic safety design**
- **II 1 G EEx ia IIC T4**
- **IP 65, encapsulation class**
- **Free choice of line counts up to 2500**

ELECTRICAL SPECIFICATION

Supply voltage +EV	4-8V
	Polarity protected
Current consumption at no load	15mA @ 5V Max 40mA
Line counts (free choice)	1…2500
Measuring steps	Max 10 000/r
Accuracy	
Dividing error	± 50° el
Channel separation	90° ± 25° el
Outputs	TTL
Load max	± 20mA
Cable length max	10m Included in Ci
U_{high} (at 10mA load) U_{low} (at 10mA load)	> +EV - 1,6V < 0,4V
Frequency range	0…100kHz

Conditions for Ex certificate

Certificate according to	II 1 G EEx ia IIC T4
Certificate number	SP03ATEX3613X
U_i Max input voltage	10,0 V
I_i Max input current	400 mA
P_i Max input power	1,0 W
C_i Internal capacitance	120 nF
L_i Internal Inductance	12 µH
T_{amb} Ambient temperature	-20°C … +60°C
Maximum shaft load, axial:	50N
Maximum shaft load, radial:	60N
Maximum shaft speed:	6000rpm
Replacement interval:	50000 h / $6x10^9$ revolutions (at 2000rpm continous op.)
Encoder casing must be connected to ground	

OUTPUT CIRCUIT

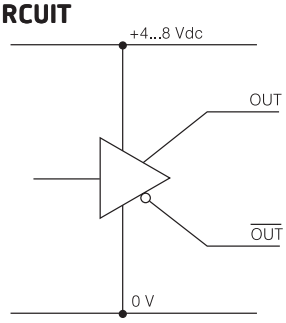

OUTPUT SIGNALS

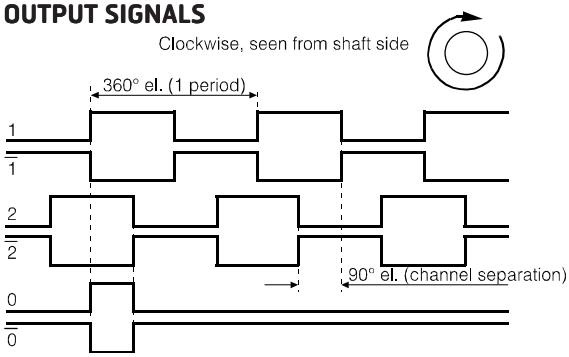

CONNECTION

Function	Colour
1	Green
$\overline{1}$	White
$\overline{2}$	Black
2	Yellow
+ E Volt	Red
0 Volt	Blue
0	Brown
$\overline{0}$	Violet

LEINE LINDE

CE

632 ATEX

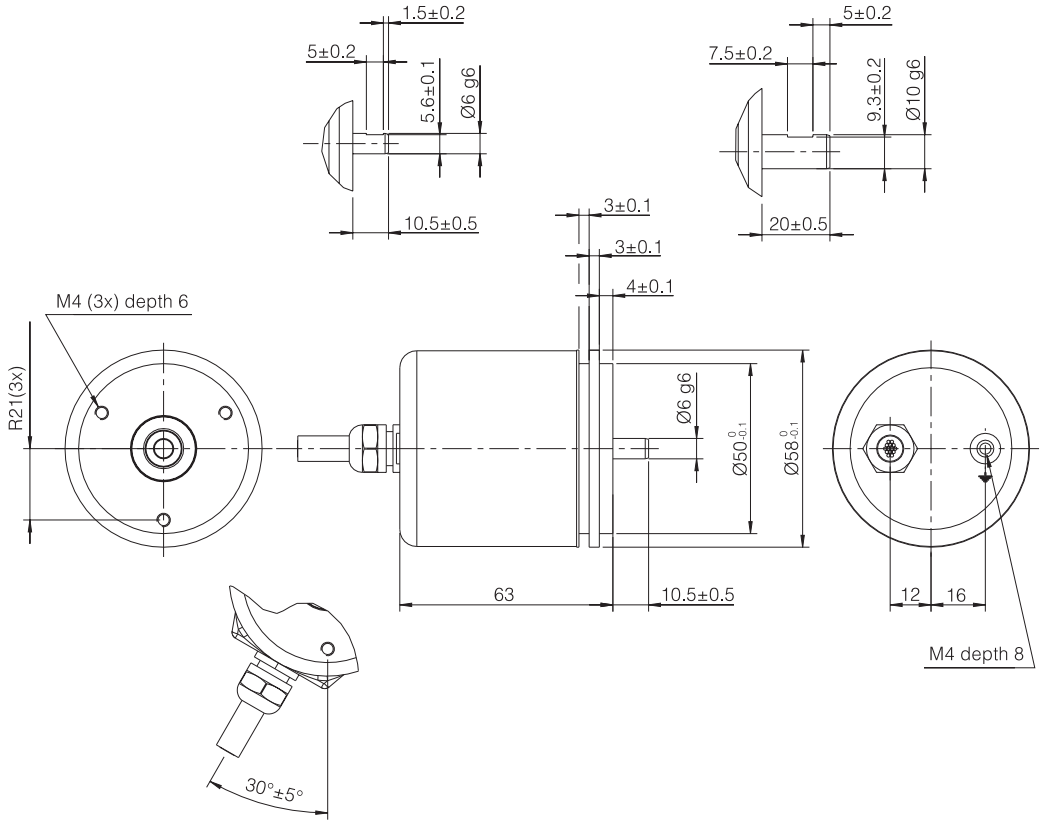

MECHANICAL SPECIFICATION

Shaft, Stainless steel	Ø 6mm, 10mm
Moment of inertia	2,6 x 10^{-6} kgm²
Load max	
Radial	60N
Axial	50N
Speed max	6000 rpm
Code disc	Standard
Temperature	
Operating	-20°C ... +60°C
Storage	-20°C ... +60°C
Housing	Aluminum, Nickel surface 20µm
Weight	Approx. 300g
Protection class	IP 65 according to IEC 529
Vibration	<100m/s² (50…2000 Hz)
Shock	<1000m/s² (11ms)
Cable	6x0,25mm² 2x0,35mm² PVC

ORDERING INFORMATION

Available models

632 900170
6 mm shaft without face, Cable axial, 1 - 2500 ppr

632 900171
6 mm shaft with face, Cable axial, 1 - 2500 ppr

632 900172
10 mm shaft with face, Cable axial, 1 - 2500 ppr

632 900175
10 mm shaft with face, Cable radial, 1 - 2500 ppr

LEINE LINDE ISO 9001 / ISO 14001 certified
Olivehällsvägen 8, SE-64542 Strängnäs, Sweden.
Phone: +46 (0)152 26500. Fax: +46 (0)152 26505. E-mail: info@leinelinde.se

07-09-25 PS. Specifications can be changed without prior notice.